THE UNIVERSITY OF MANITOBA

April 23, 2008

FINAL EXAMINATION

PAPER NO. 604

TITLE PAGE

DEPARTMENT & COURSE NO: MATH 1700

TIME: 2 HOURS

EXAMINATION: Calculus 2

EXAMINER: Various

FAMILY NAME: (Print in ink) _____

FIRST NAME: (Print in ink) _____

STUDENT NUMBER: (Print in ink) _____

SIGNATURE: (Sign in ink) _____

(I understand that cheating is a serious offense)

Please mark your section number

- ❑ A01 slot 2 MWF (9:30 – 10:20) W. Korytowski
- ❑ A02 slot 6 MWF (11:30 – 12:20) A. Gerhard
- ❑ A03 slot 10 T & R (1:00 – 2:15) D. Kalajdzievska
- ❑ A92 Challenge for Credit (Sisler)
- ❑ Deferred Exam

INSTRUCTIONS TO STUDENTS:

This is a 2 hour exam. **Please show your work clearly.**

No texts, notes or other aids are permitted. There are not calculators, cellphones or electronic translators permitted.

This exam has a title page, 7 pages of questions and 2 blank pages for rough work. Please check that you have all the pages. You may remove the blank pages if you want, but be careful not to loosen the staple.

The value of each question is indicated in the left-hand margin beside the statement of the question. The total value of all questions is 100.

Answer all questions on the exam paper in the space provide beneath the question. If you need more room, you may continue your work on the reverse side of the page, but CLEARLY INDICATE that your work is continued.

DO NOT WRITE IN THIS COLUMN

1.	/61
2.	/ 4
3.	/ 3
4.	/ 6
5.	/ 6
6.	/ 7
7.	/ 6
8.	/ 2
9.	/ 5
TOTAL	/100

Value

1. Calculate each of the following integrals

(a) $\int \cos^3 x \, dx$

5

(b) $\int_0^{\pi} \sin^2 x \, dx$

6

(c) $\int x^2 \tan^{-1} x \, dx$

9

Value

1.

(d) $\int \frac{1}{x^2\sqrt{x^2-1}}\,dx$

7

(e) $\int_0^1 x^3\sqrt[3]{x^2+1}\,dx$

9

Value

1.

(f) $\int \frac{dx}{\sqrt{5+2x-x^2}}$

8

(g) $\int_2^5 e^{\sqrt{x-1}}\, dx$

11

Value

1.

(h) $\int \frac{x}{1+x^4}\,dx$

6

2. Write the general form (in terms of unknown coefficients) of the partial fractions expansion of the expression $\frac{x+3}{(x^2-4x+4)(x^2+4)}$.

DO NOT determine the numerical values of these coefficients..

4

3. Find the value of $\cos\left(\tan^{-1}\left(-\frac{2}{5}\right)\right)$

3

Value

4. Use the comparison test to determine whether the improper integral converges or diverges.

$$\int_0^1 \frac{e^x}{x^2}\,dx$$

6

5. Write an integral which represents the length of the arc enclosed by one petal of the curve $r = 2\cos(5\theta)$.
Justify your work. A sketch is sufficient. DO NOT evaluate this integral.

6

Value

6. Write an integral which represents the surface area of the solid formed when the curve with equation $y = \sin^{-1}\left(x^2\right)$ for $0 \le x \le 1$ is rotated about the x-axis. DO NOT evaluate this integral.

7

7. The base of a solid is the region enclosed by the curve $y = e^x - 3$, the y-axis and the x-axis. Cross-sections perpendicular to the y-axis are squares. Write an integral which represents the volume of this solid. Be sure to draw a sketch. DO NOT evaluate this integral.

6

Value

8. A parametric curve, shown below, is traced once by the parametric equations

$$x = f(t) \qquad y = g(t) \qquad 1 \le t \le 4$$

The area of each of five regions is given in the diagram.

State the value of $\int_1^4 y \frac{dx}{dt}\, dt$ showing how the five indicted areas were used to arrive at your final answer.

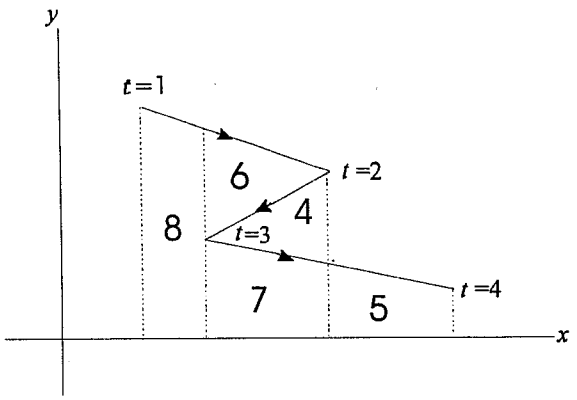

2

9. Find the intervals in which the curve defined by $f(x) = \int_{-10}^{x} e^{2t^3 - t^2}\, dt$ is concave up and in which intervals it is concave down.

5